PLUSTHERM
INDUKTIONSERWÄRMUNG - INDUCTION HEATING

CABLE HEATING

with
PLUSTHERM POINT AG

THERM

PLUSTHERM
INDUKTIONSERWÄRMUNG - INDUCTION HEATING

ABOUT US

We are a Swiss company specialized in equipment machines for inductive and capacitive heating applications. We supply static converters in the middle frequency range and high frequency converters with output power from 1kW to 600kW.

The know-how of our company is based on the experience of over 50 years, at the beginning we were known as "BBC / ABB middle-& high frequency generators". Today we are an independent company registered as "PLUSTHERM POINT LTD".

With our well-qualified Swiss partners we also make planning and coordination work for all-included projects, delivery and of course complete commissioning.

200kW stand-alone preheater with 4 coils (mobile)

THERM

OUR STRENGTHS

Simple design

All our units are structured very simple and well-arranged. You can choose between a stand-alone unit and a unit with flexible coil circuit.

Support

With us you get support for 365 days a year. In case of problems you will not be put off by a secretary, they are always graduate engineer available with a lot of experience.

Flexibility

With us the customer is always right. Our team is a small and agile unit that stands quickly and easily to the side. And if you "just quickly" would like to clarify a question on the phone, we always have an open ear for you.

Experience

Plustherm has more than 50 years experience with cable preheating.
All our sales engineers are graduated engineers and they can give you the best assist thanks to their technical background.

CABLE HEATING

Different cables and wires must be heated before the isolation process (extruding) according to the used material from 80-200°C.

100kW unit with flexible coil circuit

For this application the induction heating is very common as a careful and pollution free solution. Because the warmth is generated in the cable-core itself directly (without contacting) the cable surface remains perfectly smoothly and without scratches.

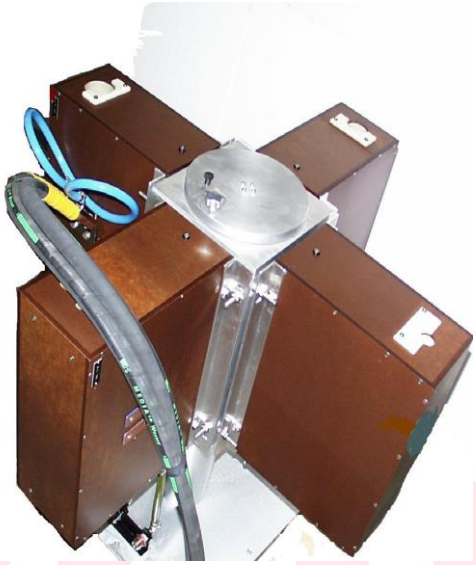

Vertical stand with coil changer

Crucial for the quality of the cable-production process is also a perfect adherence to the required temperature.

With a monitoring system developed by our company the necessary performance is adapted to the cable line speed to keep constant temperature at variable line speed.

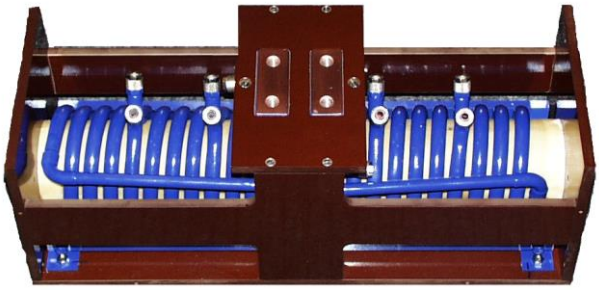

Coil for cable heating

Our cable heating systems are based on an **experience of over 50 years** and are up to date with the newest power electronics developments. Plustherm generators are supplied to several considerable cable manufacturers. The experiences made with these manufacturers flows constantly into the advancement of our devices.

30kW unit with stand

MAIN FEATURES OF THE CHOSEN FREQUENCY CONVERTER TECHNIQUE

Electrical

IGBT parallel resonance oscillating network. Direct heating power regulation.
No change of resonant capacitors for different coils or cable.

Water cooling

The build in **water pump takes care of water flow** (constant water flow by variable supply pressure). No shot down through the drop of incoming water pressure.

The temperature of cooling water is controlled (about 40 °C) and is not in function of incoming water temperature (If this temperature is < 40°C). No water condensation in TN cabinet (**adjusted to tropical environment**).

Feed forward control of the cable temperature

The outgoing temperature of the cable is constant (T.set +/- 5°C, not function of the line speed)
Functional principle
The cable temperature is direct proportional to the heating power and inverse proportional to the line speed (C1 is the constant).

$$Cable\_temperature = C1 * \frac{Heatine\_power}{Line\_speed} = \frac{C2 * Line\_speed}{Line\_speed} = C1 * C2$$

If the Heating power is proportional (Heating power = C2 * Line_speed) to the line speed, than is the cable temperature not the function of the line speed.

Following table shows a small product-range sample with reachable line-speed and the required generator-performance

The material for these products is cupper (Cu) and the heating is from 20°C to 120°C.

Cable data		**Nominal power of TNX heater**						**Coil**
Cable area mm^2	Cable diameter mm	30kW m/min	60kW m/min	100kW m/min	150kW m/min	200kW m/min	300kW m/min	Cable dia. min-max. (Standard)
10	4.1	27.3	55	91	136	182	200	D=6-10
16	5.1	23.7	48	79	119	158	195	
25	6.3	19.8	40	66	99	132	188	
35	7.5	17.7	35	59	89	118	178	
50	9	15	30	50	75	100	150	
70	10.5	13.2	26	44	66	88	132	
95	12.5	6.5	13	21.5	32	43	64	D=11-18
120	14	6.3	12.5	21	31	42	62	
150	15.8	6	12	20	30	40	60	
185	17.5	5.7	11.5	19	29	38	58	
240	20.3	-	6.5	11	17	22	33	D=19-29
300	22.5	-	6	10	15	20	30	
400	26	-	5.5	9	13	18	26	
500	29.1	-	5	8.5	12.5	17	25	
630	32.7	-	3	5	7.5	10	15	D=30-42
800	36.9	-	2.8	4.5	6.8	9	13.5	
1000	41.1	-	2.5	4.2	6.4	8.4	13	
1500	50	-	1.7	2.8	4	5.6	8	D=43-55
2000	55	-	1.5	2.5	3.8	5	7.5	

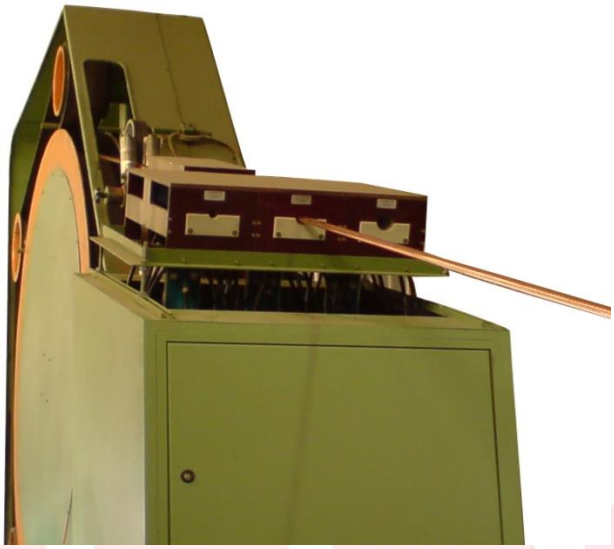

Coil stage on a 150kW unit

PLUSTHERM
INDUKTIONSERWÄRMUNG - INDUCTION HEATING

REFERENCE

Customer: Riyadh Cables, Saudi-Arabia

Object: Cable Line CV5

Preheater: Preheater TNX200 Mobil (200kW)
Stand-Alone unit on rail

Coils: #1 -> 11-18mm
#2 -> 19-29mm
#3 -> 30-42mm
#4 -> 43-55mm

PLUSTHERM
INDUKTIONSERWÄRMUNG - INDUCTION HEATING

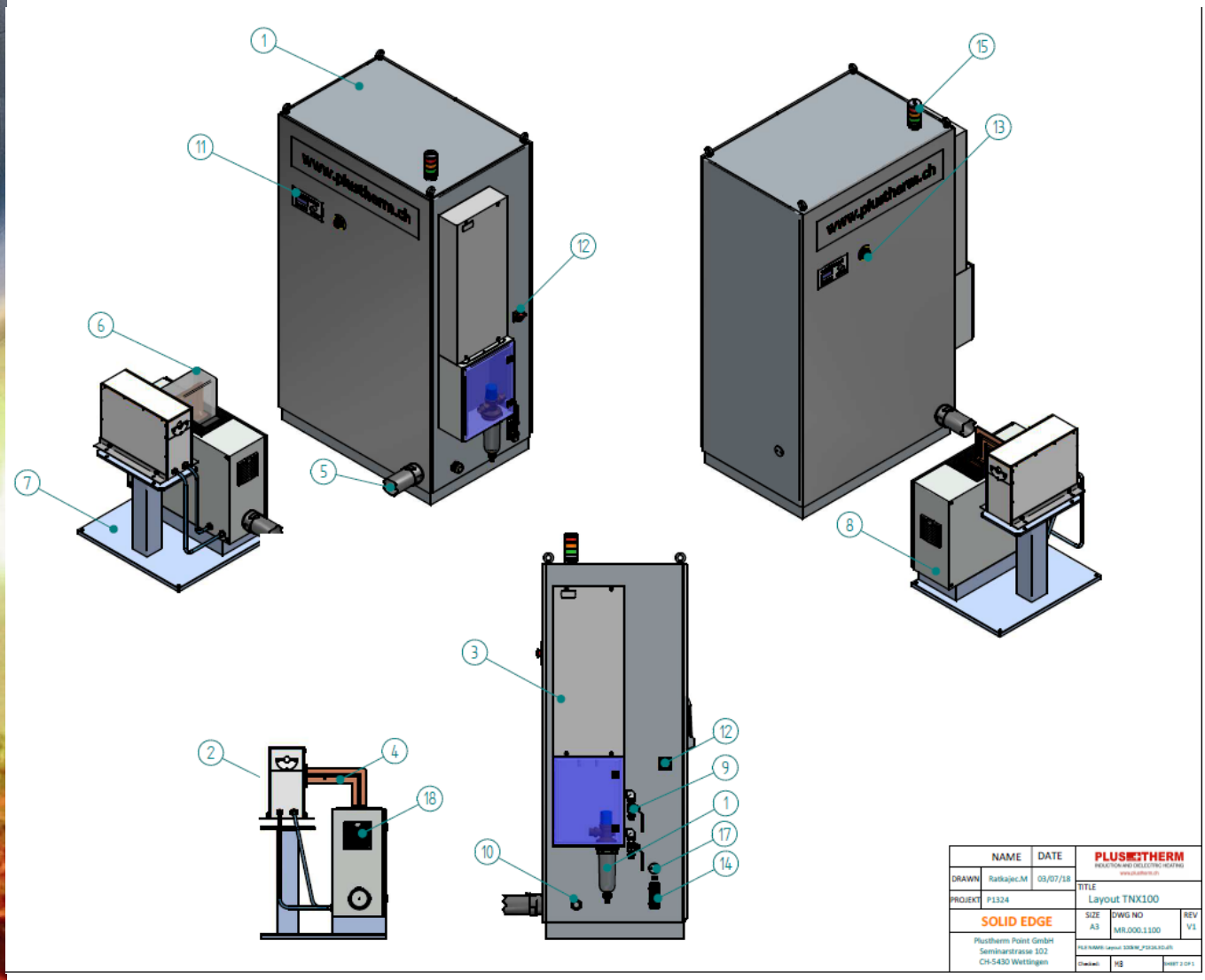

Layout of a TNX50-TNX200 with external coil stand and with external HB (output stage)

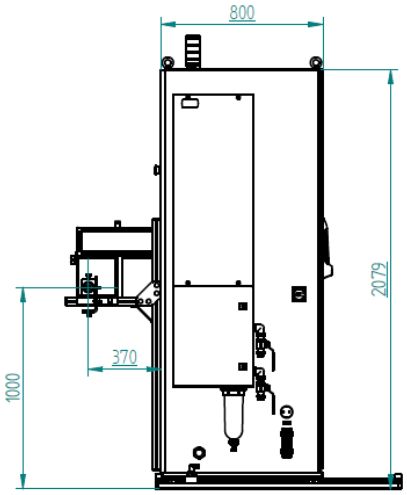

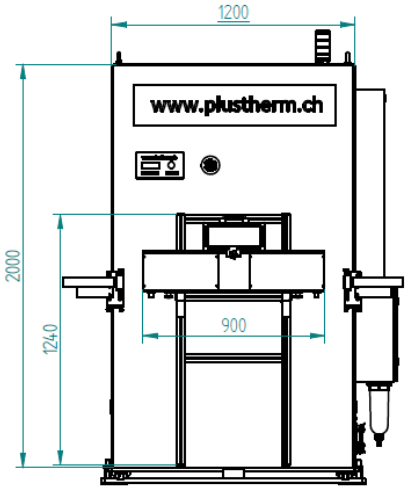

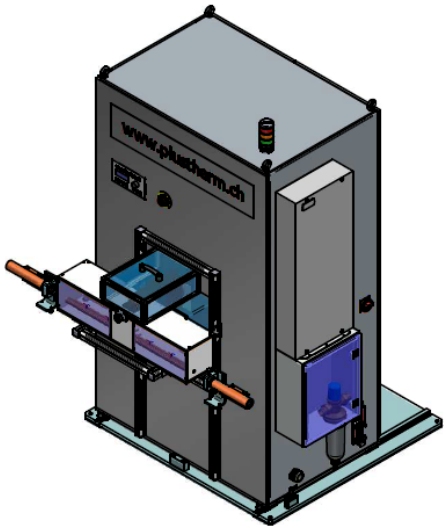

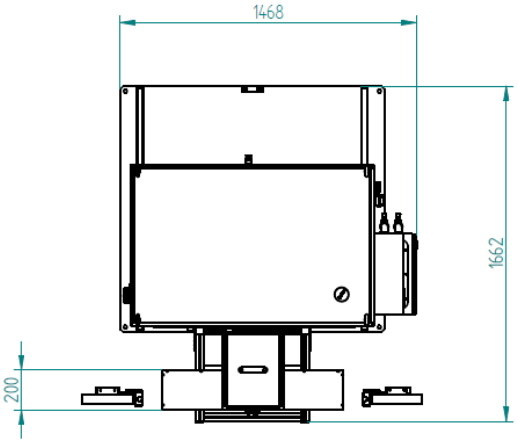

Layout of a TNX50 – TNX100 with inductor output on front side. Standard version.

Temperature measurement for cable heating

Temperature measurement systems for cable and wire are specialised indirect temperature measurement systems.
The main problem with measuring cable temperatures is that copper and aluminium cables practically do not emit (emission factor > 0.1) and generally temperatures below 200°C cannot be measured with metals.

Type Lune:

This system consists of the controller display part and a measuring head. Depending on the required measuring range different measuring heads can be used.

Figure 2: controller and display unit

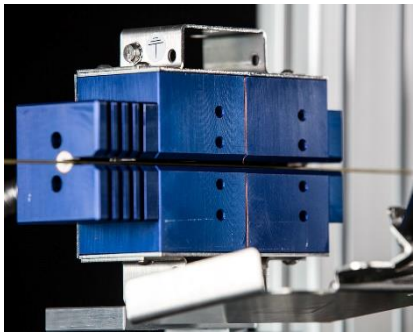

Figure 3: Head for 0.2mm to 7mm (full range with 4 heads)

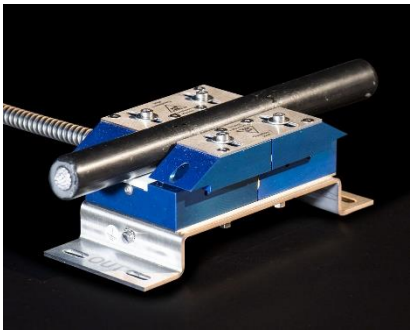

Figure 1: Head for 3.6 mm to 45mm

Ferrite tunnel

The usage of ferrite tunnel is to reduce inducted current throughout the cable line.
The tunnels increases the impedance of the cable and less unwanted current will flow through cable, rollers and earth.

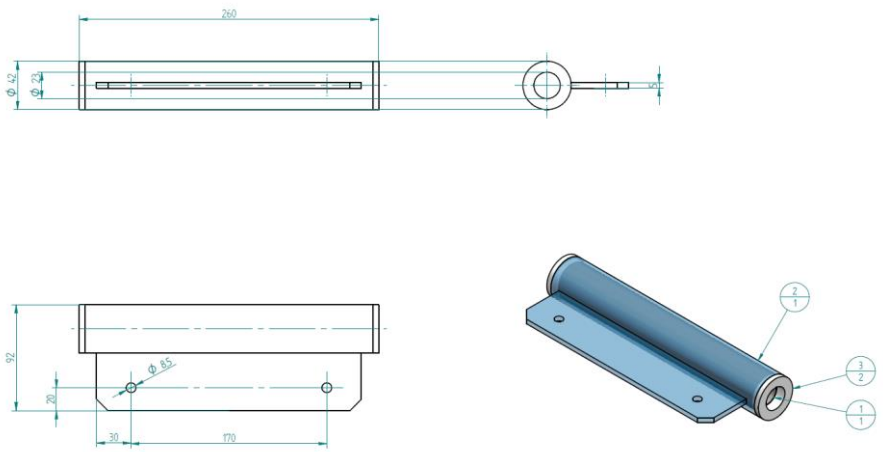

Figure 4: ferrite tunnel example – different diameter available

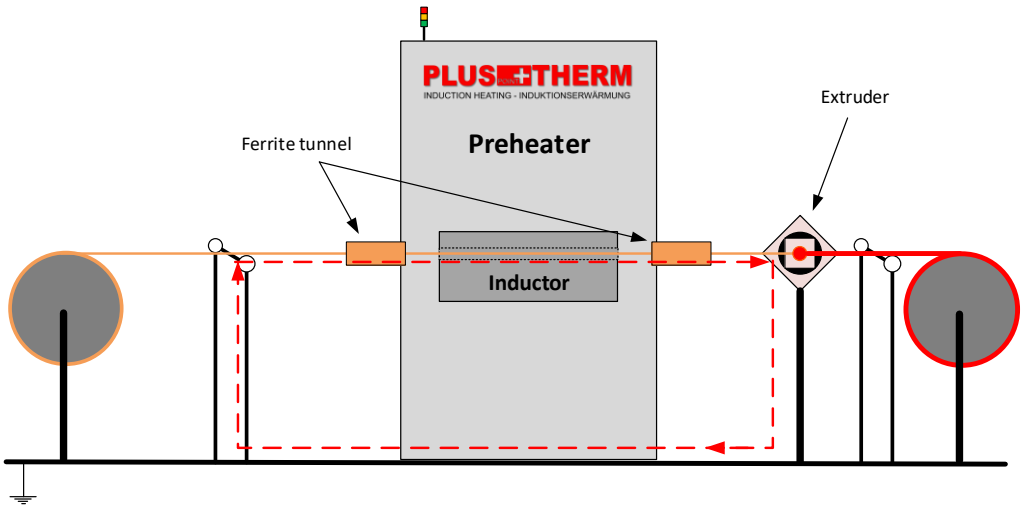

Figure 5: red dotted line indicates the current which can be inducted by the preheater

PLUSTHERM
INDUKTIONSERWÄRMUNG - INDUCTION HEATING

PLUSTHERM
INDUKTIONSERWÄRMUNG - INDUCTION HEATING

Would you like to inquire about our products? We are pleased to help you. Send your request to info@plustherm.ch or call us directly at +41 (0)56 426 80 81 and talk to our technician.

Europe & Worldwide
Plustherm Point AG • Zentralstrasse 40 • 5242 Birr
Switzerland • +41.56.426.80.81 • info@plustherm.ch • www.plustherm.ch

Africa
Broadcom Int. • Hoefystersingel, Kameeldrift-East • Pretorian
South Africa • +27.74.10.3741 • broadcom@iafrica.com

PLUSTHERM
INDUKTIONSERWÄRMUNG - INDUCTION HEATING

PRODUCTION SPEED TABLES

Material: Copper
Temperature: 100°C (ΔT = 80°C)
Optimized coil

Cable	Cu							Coil
	Δ T = 80°C	Δ T = 80°C	Δ T = 80°C	Δ T = 80°C	Δ T = 80°C	Δ T = 80°C	Δ T = 80°C	
Diameter [mm]	Max. speed with **10kW** [m/min]	Max. speed witch **20kw** [m/min]	Max. speed with **30kW** [m/min]	Max. speed with **60kW** [m/min]	Max. speed with **100kW** [m/min]	Max. speed witch **120kW** [m/min]	Max. speed with **150kW** [m/min]	Diameter min-max
0.7	149	297	446	892	1487	1784	2231	
1	128	255	383	765	1275	1530	1913	D=0.7-1.8
1.4	93	186	279	558	929	1115	1394	
1.8	90	180	270	540	900	1079	1349	
2.2	68	135	203	406	677	813	1016	
2.7	50	100	150	300	500	600	750	D=1.9-3.0
3	40	81	121	243	405	486	607	
3.8	25	50	76	151	252	303	378	
4.8	16	32	47	95	158	190	237	

PLUSTHERM
INDUKTIONSERWÄRMUNG - INDUCTION HEATING

PRODUCTION SPEED TABLES

Material: Copper
Temperature: 120°C (ΔT = 100°C)
Optimized coil

Cable data		**Cu-Cable deltaT = 100°C** (T1 = 20 °C T 2 = 120 °C)						Coil
Cable Area mm2	Cable diameter mm	60 kW m/min	75 kW m/min	100 kW m/min	150 kW m/min	200 kW m/min	300 kW m/min	Cable dia. min. - max. (Standard)
10	4.1	55	68	91	136	182	200	
16	5.1	48	59	79	119	158	200	
25	6.3	40	50	66	99	132	200	D = 6 - 10
35	7.5	35	44	59	89	118	178	
50	9	30	37.5	50	75	100	150	
70	10.5	26	33	44	66	88	132	
95	12.5	13	16	21.5	32	43	64	
120	14	12.5	15.5	21	31	42	62	D = 11 - 18
150	15.8	12	15	20	30	40	60	
185	17.5	11.5	14	19	29	38	58	
240	20.3	6.5	8	11	17	22	33	
300	22.5	6	7.5	10	15	20	30	D = 19 - 29
400	26	5.5	7	9	13	18	26	
500	29.1	5	6.5	8.5	12.5	17	25	
630	32.7	3	3.8	5	7.5	10	15	
800	36.9	2.8	3.4	4.5	6.8	9	13.5	D = 30 - 42
1000	41.1	2.5	3.2	4.2	6.4	8.4	13	
1500	50	1.7	2	2.8	4	5.6	8	D = 43 - 55
2000	55	1.5	1.9	2.5	3.8	5	7.5	
3000	70	1	1.3	1.7	2.5	3.4	5	D = 56 - 70